PIT JACK GD-1

STANDARD AIR HYDRAULIC SINGLE RAM PIT JACK

Item number: GD-1

- Rapid and precise air hydraulic unit with high speed ram travel
- Simple modern design with control panel at ergonomical working height
- Can be made to fit all pits due to its adjustable frame
- Available in 10, 15 or 20 t capacity



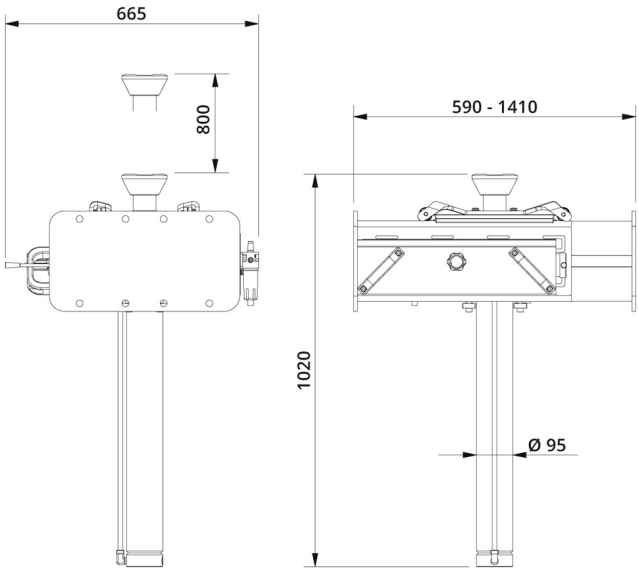

Capacity:	10 / 15 / 20 t
Stroke:	800 mm
Min height:	1020 mm
Max height:	1820 mm
Depth:	665 mm
Cylinder diameter:	60 mm
Air supply:	8 - 10 bar
Weight:	220 kg

PIT JACK

ACCESSORIES GD-1:

AB

Support bridge - customized for each pit



Item number: 5867010

ABT

Telescopic support bridge



Item number: 5867500

S200

Integrated safety stand



Item number: 5866900

AS3

Gearbox saddle



Item number: 5900500

T4-1

Cross beam adaptor



Item number: 5866500

T4-1W

Cross beam adaptor



Item number: 5866550

T5-1

Flexible and adjustable cross beam adaptor



Item number: 5866700

T6-1

Innovative cross beam adaptor



Item number: 5866050

PIT JACK

ACCESSORIES GD-1:

T6-1W

Innovative cross beam adaptor



Item number: 5866000

FW2-130

V-saddle



Item number: 9112710

FW2-90

V-saddle



Item number: 9112700

US-100

U-saddle



Item number: 9113210

US-130

U-saddle



Item number: 9113240

VB1

Wall bracket

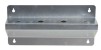

Item number: 5866340

VB2

Wall bracket



Item number: 5866380

GR

Handle



Item number: 5863400

PIT JACK

ACCESSORIES GD-1:

HSD-F

Front air connection kit

[redacted]



Item number: 5863410

[redacted]

ISO VG5

Oil, RENOLIN DTA, 1L



Item number: 09.260.47